FOR-1755 Rev.1.3

未注公差/General tolerances(mm)														
0~3	>3~6	>6~10	>10~18	>18~30	>30~50	>50~80	>80~120	>120~180	>180~250	>250~315	>315~400	>400~500	>500	0.1/10
±0.12	±0.18	±0.22	±0.26	±0.31	±0.37	±0.57	±0.80	±0.93	±1.05	±1.15	±1.60	±2.20	±2.50	±2°

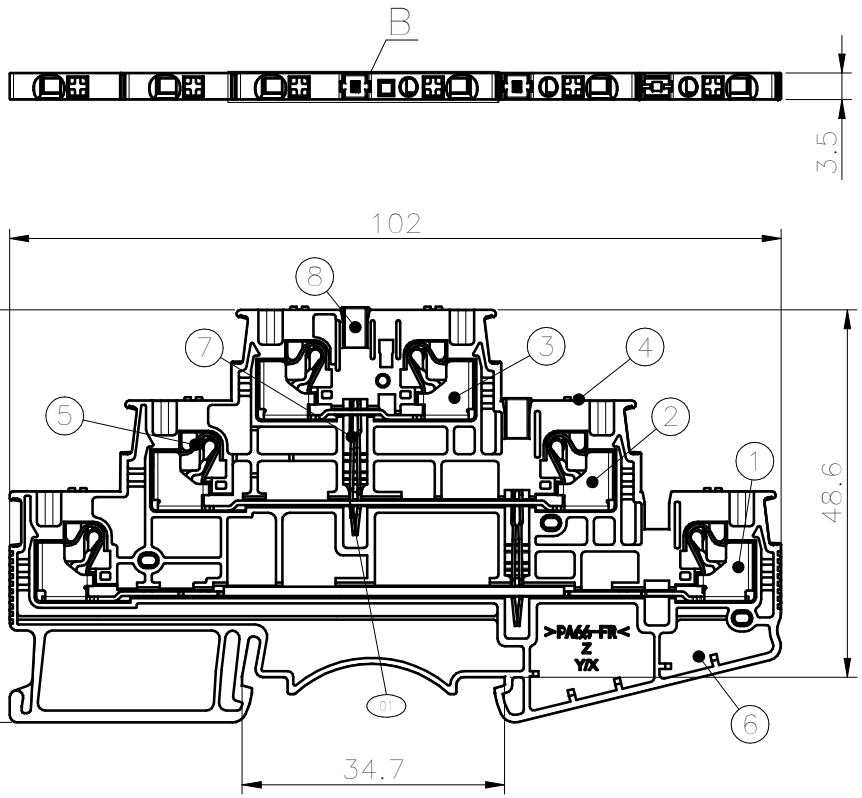

VIEW A

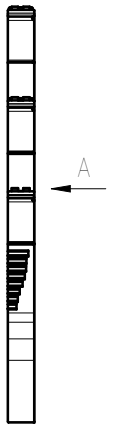

please refer to the 3D model,
for those unmarked dimensions

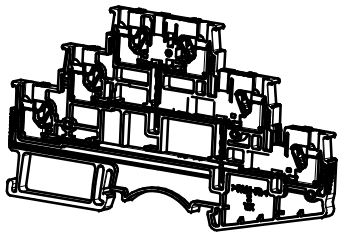

ITEM	NAME OF PART	MATERIAL	NOTES
8	Housing2	PA66	UL94V-0
7	Current_carrier4	Copper	Sn Plated
6	Housing1	PA66	UL94V-0
5	Spring	Stainless steel	/
4	Button	PA66+GF%	UL94V-0
3	Current_carrier3	Copper	Sn Plated
2	Current_carrier2	Copper	Sn Plated
1	Current_carrier1	Copper	Sn Plated

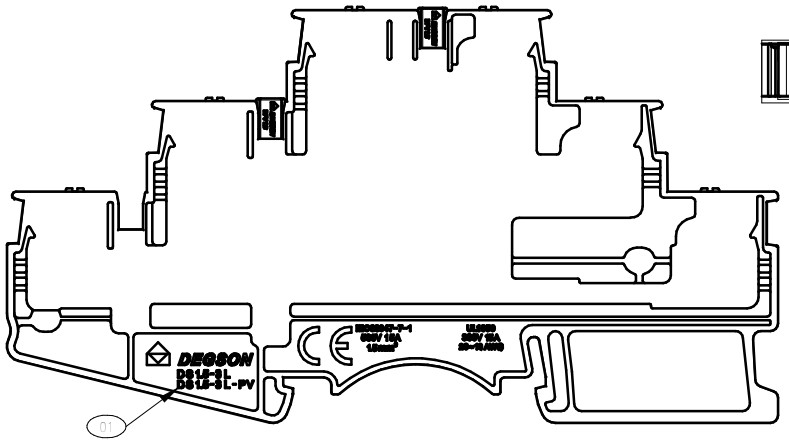

B
2:1

This surface is black.

UL 标准/UL Standard:	B	C	D
额定电压/电流/Rated Voltage(V)/Current(A)	300/15	300/15	600/5
IEC 标准/IEC Standard:			
过压类别/Overvoltage Category/污染等级/Pollution Degree	III/3	III/2	II/2
额定电压/电流/Rated Voltage(V)/Current(A)	500/15	/	/
额定脉冲电压(KV)/Rate Impulse Voltage(KV)	6	/	/
螺丝扭矩/Torque Tightening(N· m/Lb.in)	/		
线径范围(硬线和软线)/Wire Range(rigid and flexible)(AWG/mm²)	26~16, 14SOL / 0.14~1.5conductor cross section flexible, with ferrule with plastic sleeve max.0.5mm² (stripping length: 8mm)		
间距/Pitch(mm)/线数范围/Poles	3.50/N=01P		
剥线长度/Stripping length(mm)	8~10		
使用温度范围/Operating temperature(°C)	-40~+105		
符合 RoHS 环保要求/Conform to RoHS	Yes		
标准颜色编号/Standard color number: PANTONE / RAL	/		

REV	ECN	DESCRIPTION	DRFT	DATE
01	/	modify structure and logo	马恩开	2021.08.20

DEGSON

APPD:	李根劳	2021.08.23
CHKD:	马恩开	2021.08.20
DRFT:	马恩开	2021.08.20

A4 mm (inch)

MATERIAL:
SURFACE:
MAT NO./REV: 11040000210-1 / 00
MAT STATUS: 小批量

NAME: DS1.5-3L-PV-01P-11-00A(H)

DRAWING NO.	TYPE	DRAWING STATUS	SCALE	SHEET
200003315	CUSTOMER DRAWING		1:1	1/1

Transfer or duplication of this document as well as the utilization or communication of its contents are prohibited unless explicit authorization is granted. Violations will be liable for compensation. All rights reserved for patent, utility model or designs registrations. 非给予明确授权，否则禁止转让、复制、利用、交流本文件的内容。侵犯者将负赔偿责任。本公司保留对涉及发明、实用新型和外观专利的所有权利。